WCN Opto Group Co., Limited

WCN1-00C0B7-C31

SPECIFICATION

WCN			CUSTOMER Confirmed
Prepared by	Checked by	Approved by	
Fei	Athena		
REVISION RECORD			

RoHS

REVISION: A1

Outer Dimension:

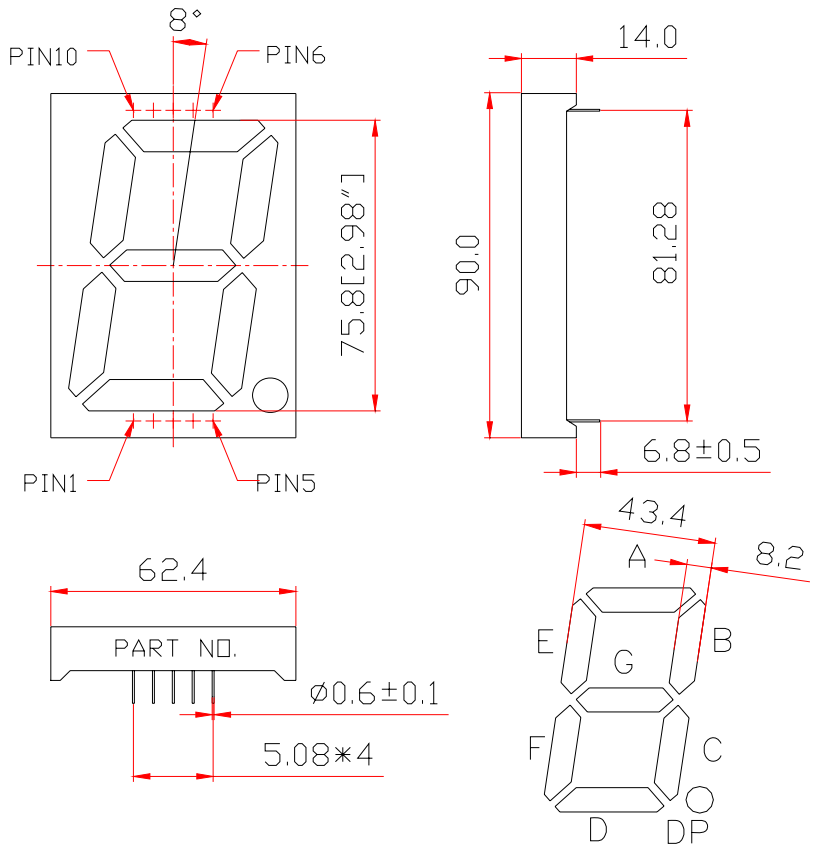

Notes: Unless otherwise stated, The tolerance is ±0.25mm.

Circuit Diagram:

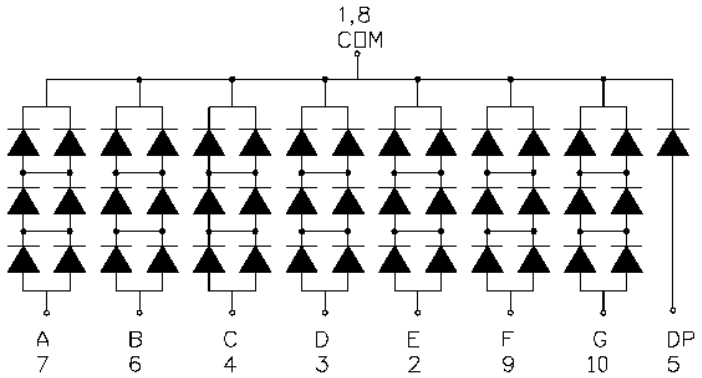

Pin Connection:

PIN NO.	CONNECTION	PIN NO.	CONNECTION
1	Common Cathode	6	Anode B
2	Anode E	7	Anode A
3	Anode D	8	Common Cathode
4	Anode C	9	Anode F
5	Anode DP	10	Anode G

WCN Opto Group Co., Limited

■ Features:

- High Reliability
- Color: Blue
- Low Power Requirement
- Easy Assembly

■ Description:

- Single Digit LED Display
- Digit Height:38.1mm(1.5”)
- Black Face and Milky Segment

■Absolute Maximum Rating (Ta=25℃) :

Parameter	Symbol	Condition	Color	Rating	Units
Power Dissipation Per Segment/DP	P_d	—	Blue	430/70	mW
Forward Current Per Segment/DP	I_F	—	Blue	40/20	mA
Peak Forward Current Per Segment	I_{FP}	1/10 Duty 10KHz	Blue	100	mA
Reverse Voltage Per Segment/DP	V_R	—	Blue	15/5	V
Operating Temperature Range	Topr	—	—	-35～+85	℃
Storage Temperature Range	Tstg	—	—	-35～+85	℃

■Electrical/Optical Characteristics Rating(Ta=25℃)

Item	Symbol	Test conditions	Location	Rating			Units
				Min.	Typ.	Max.	
Forward Voltage	V_F	I_F=40mA	Per Segment	7.8	9.6	10.8	V
		I_F=20mA	DP	2.6	3.2	3.6	
Reverse Current	I_R	V_R=15V	Per Segment	—	—	100	μA
		V_R=5V	DP				
Luminous Intensity	I_V	I_F=20mA	Per Segment	26001	40000	58000	ucd
Wave Length	λ_P	I_F=40mA	Per Segment	—	460	—	nm
	λ_D			465	470	475	
Spectral Line Half Width	△λ	I_F=40mA	Per Segment	—	20	—	nm
Luminous Intensity Matching Ratio (Segment to Segment)	I_{v-m}	I_F=20mA	—	—	—	1.2:1	

■ Luminous Intensity Sorting: (Luminous Intensity Tolerance is +/-10%)

Rank	Symbol	Condition	Min	Max	Unit
V	V	I_F=10mA	26001	31000	μcd
W	W	I_F=10mA	31001	37000	μcd
X	X	I_F=10mA	37001	43000	μcd
Y	Y	I_F=10mA	43001	50000	μcd
Z	Z	I_F=10mA	50001	58000	μcd

■ Soldering Conditions: Soldering Temp. ≦+260℃, Soldering Time. ≦3sec.
(at 2mm Distance from The Case of Reflector Edge)

Typical Electro-Optical Characteristics Curve:

Fig1. Forward Current vs. Forward Voltage:

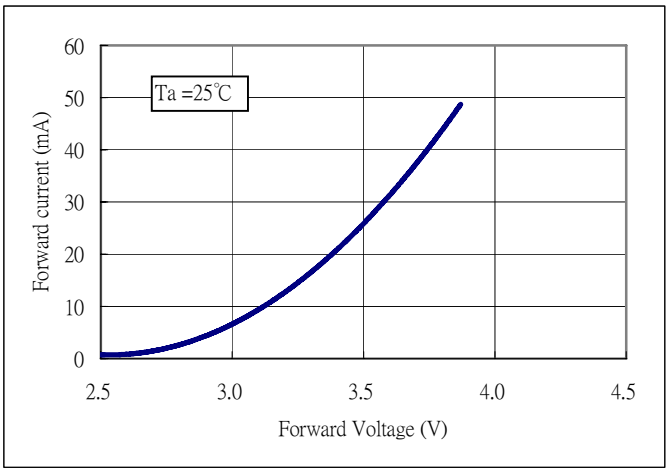

Fig2. Forward Current vs. Relative Intensity:

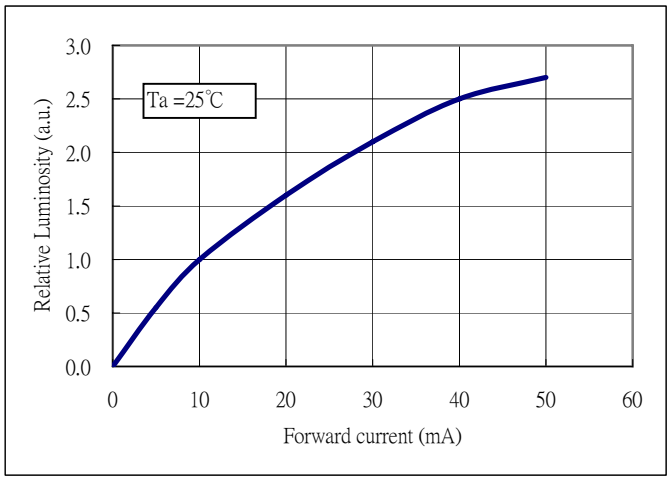

Fig3. Forward Current vs. Relative wavelength:

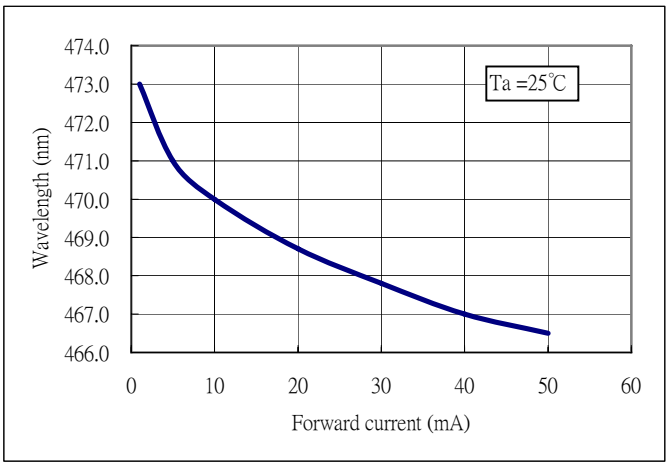

Fig4. Life Test at 20mA R.T. 1000hrs:

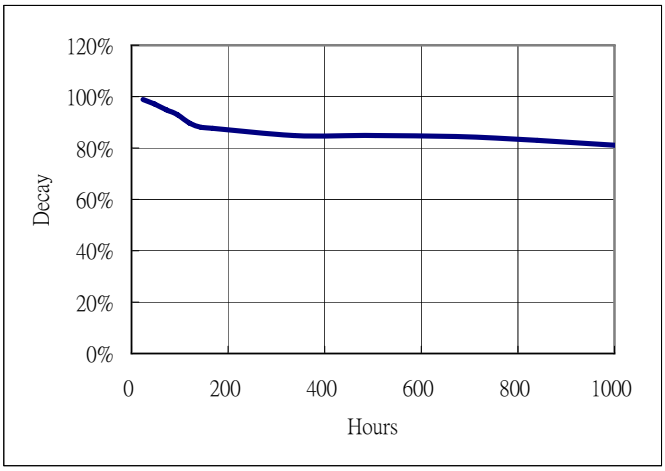

LED Displays Reliability Test:

CLASSIFICATION	TEST ITEM	DESCRIPTION AND TEST CONDITION
ENDURANCE TEST	OPERATION LIFE	EVALUATES RESISTANCE OF THE DEVICE WHEN OPERATED AT ELECTRICAL STRESS T_a = UNDER ROOM TEMPERATURE $I_F = I_F$ max
	HIGH TEMPERATURE HIGH HUMIDITY STORAGE	EVALUATES MOISTURE RESISTANCE OF THE DEVICE WHEN STORED FOR A LONG TERM AT HIGH TEMPERATURE AND HUMIDITY T_a =65±5°C RH=90~95%RH TEST TIME=240± 2Hrs
	HIGH TEMPERATURE STORAGE	EVALUATES DEVICE DURABILITY FOR LONG TERM STORAGE IN HIGH TEMPERATURE T_a =85±5°C(COB: Ta=65±5°C) TEST TIME=1000Hrs(-24Hrs, +72Hrs)
	IOW TEMPERATURE STORAGE	EVALUATES DEVICE DURABILITY FOR LONG TERM STORAGE IN LOW TEMPERATURE T_a =-35±5°C TEST TIME=1000Hrs(-24Hrs, +72Hrs)
ENVIRONMENTAL TEST	TEMPERATURE CYCLING	EVALUATES RESISTANCE OF DEVICE AT THERMAL STRESSES OR EXPANSION AND CONTRACTION 85°C ~ 25°C ~ -35°C ~ 25°C 30min 5min 30min 5min 10 CYCLES(COB: Thot=65°C, Tcold=-25°C
	THERMAL SHOCK	EVALUATES DEVICE STRUCTURE AND STRUCTURE AND MECHANICAL RESISTANCE WHEN SUDDENLY EXPOSED AT SERVE CHANGES 85±5°C ~-35±5°C 10min 10min 10 CYCLES(COB: Thot=65°C,Tcold=-25°C
	SOLDERABILITY	EVALUATES SOLDERABILITY ON LEADS OF DEVICE T.SOL=230±5°C DWELL TIME=5±1sec.
	SOLDER RESISTANCE	EVALUATES RESISTANCE TO THERMAL STRESS CAUSED BY SOLDERING T.SOL=260±5°C DWELL TIME=10±1sec.

Package method 1:

30 pcs / Red Expandable Polyethylene.

180 pcs / Box(360*175*130mm).

1080 pcs / Catton(550*380*280mm).